BODY, CENTER CONSOLE - Z26S4D92AN/AH/BN/BH (C750137)

2026 RZR - RZR PRO S4 ULTIMATE (R01) - Z26S4D92AN/AH/BN/BH

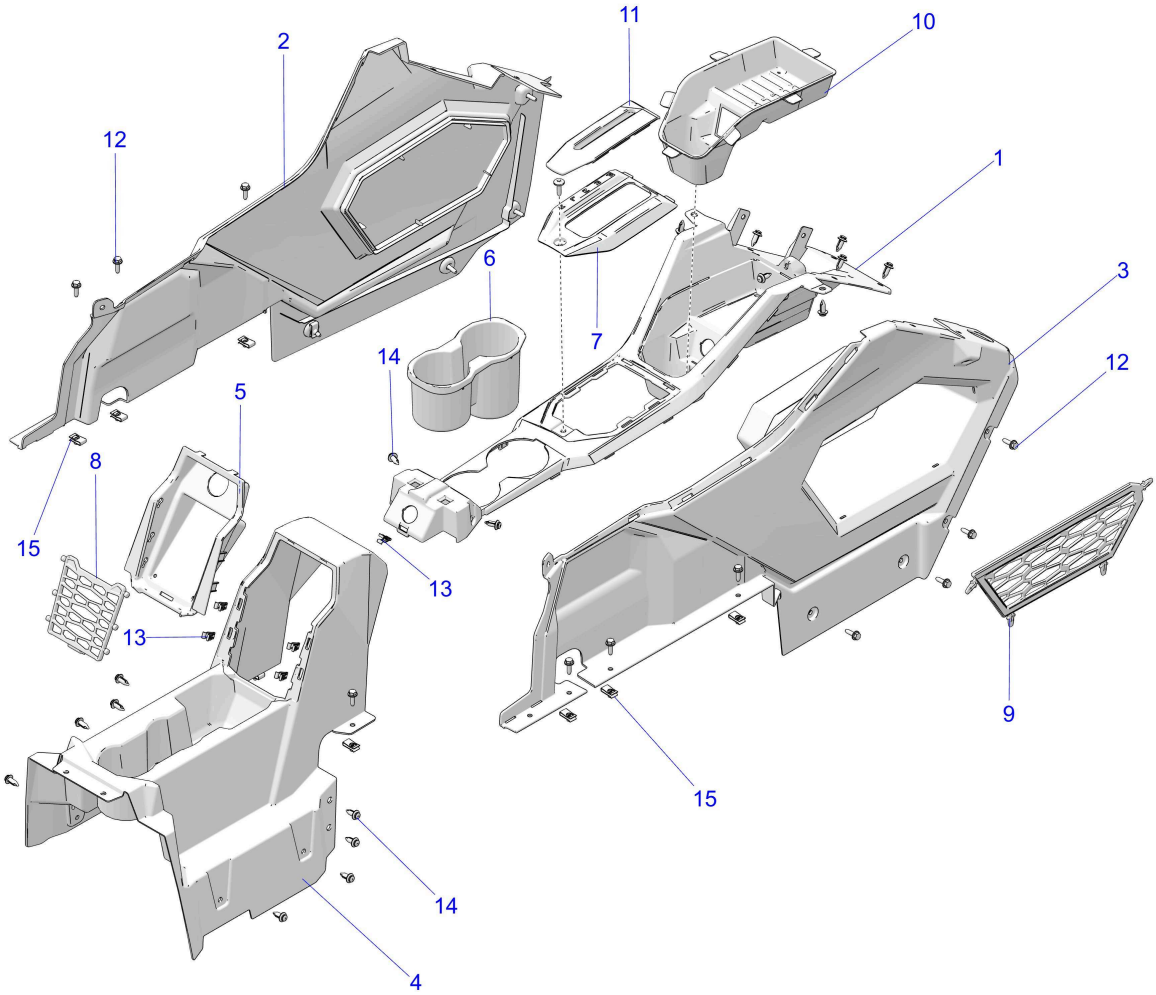

© 2023 Polaris Industries Inc.

C750137

Reference #	*Part#*	*Description*	*Quantity*
1	5467330-653	CONSOLE-CENTER,TITANIUM [TITANIUM METALLIC]	1
2	5455358-070	CONSOLE-CENTER,LH,BLK	1
3	5455359-070	CONSOLE-CENTER,RH,BLK	1
4	5455722-070	CONSOLE-CENTER,REAR,BLK,MP	1
5	5455720-070	BIN-CONSOLE,RR,STORAGE,BLK,MP	1
6	5455779	HOLDER-CUP	1
7	5456354-070	PANEL-SHIFT COVER,BLK	1
8	5418269	NET-CONSOLE,STORAGE	1
9	5416934	NET-CONSOLE,STORAGE	1
10	5416935	LINER-CONSOLE,STORAGE	1
11	5417298	PAD-SHIFTER	1
12	7518529	SCR-M6X1.0X20,HXHD,FLG,TDFM,BK	16
13	7519806	CLIP-DASH,TRIM,METAL	5
14	7661855	RIVET-TUFLOK,.315-.325X.787	AR
15	7081305	CLIP-U SPEED NUT	10

Copyright 1996-2026 Polaris Industries U.S.A All rights reserved.